AI in Medical Devices

# SLEEP MONITORING

Jay Vinchhi
Yash Katiyar
Achal Gawande
Khushi Jain

# INTRODUCTION

**The Issue**: Poor sleep quality is a growing global health crisis, linked to cardiovascular issues, cognitive decline, and chronic fatigue

**The Gap**: Most individuals rely on subjective feelings to gauge their sleep quality. Existing clinical sleep studies (polysomnography) are accurate but expensive, uncomfortable, and inaccessible for daily use.

**The Solution**: An unobtrusive, home-based IoT system that continuously monitors physiological metrics and environmental factors to provide actionable insights into sleep health.

# ARCHITECTURE

- **Data Acquisition (Edge)**: Non-invasive sensors placed in the bed/room (ambient).
- **Local Controller (Gateway)**: A microcontroller (Raspberry Pi) that aggregates sensor data, performs analysis and transmits it via Bluetooth.
- **User Interface**: A mobile application where the user views their sleep reports.

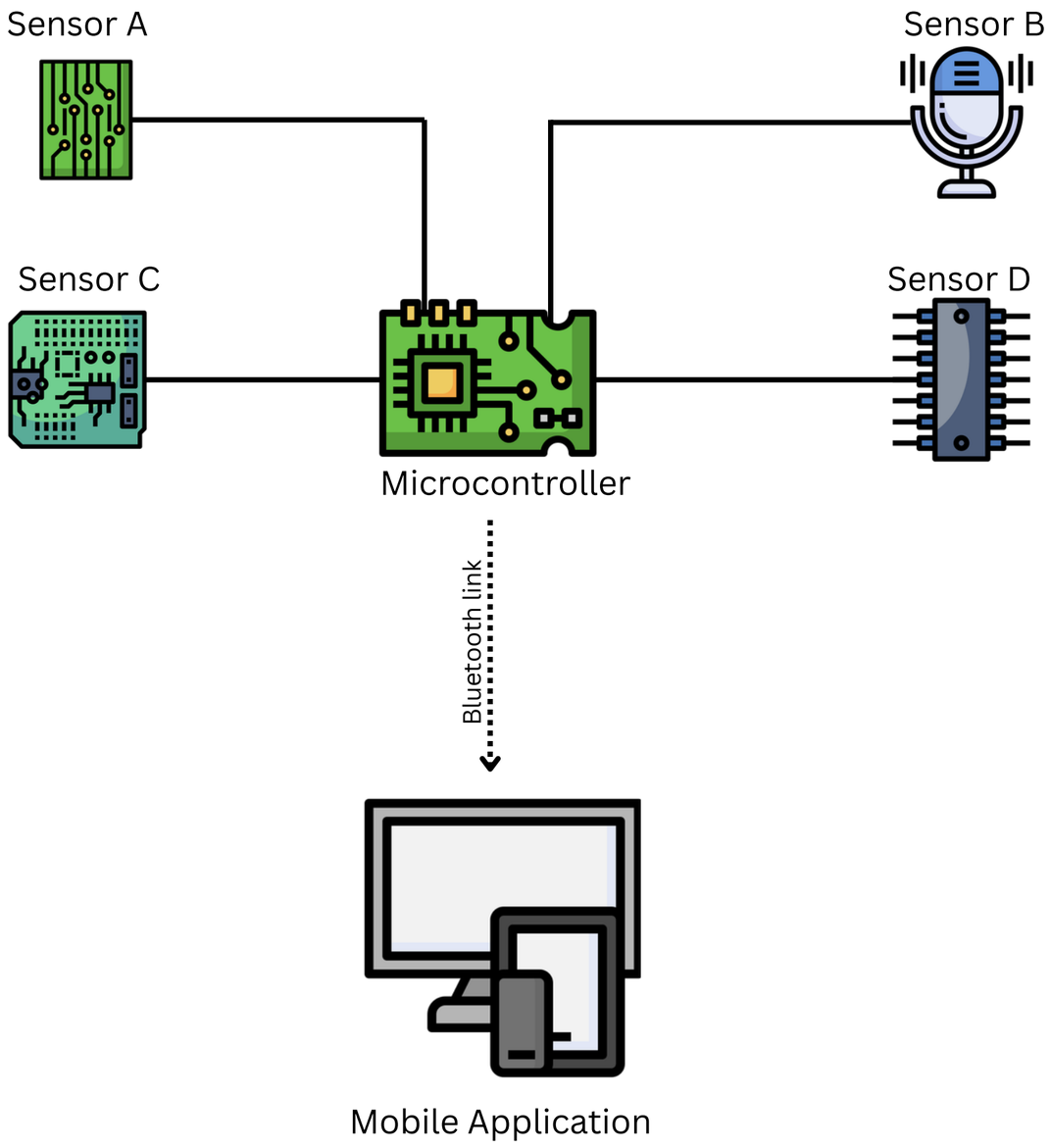
Sensor A
Sensor B
Sensor C
Sensor D
Microcontroller
Bluetooth link
Mobile Application

# INPUTS

| Sensor Type | Specific Input | What it Measures / Purpose |
|---|---|---|
| Piezoelectric / Pressure | Bed force / vibration | Detects tosses, turns, bed exits, and estimates respiration rate |
| Optical / PPG | Heart Rate & SpO2 | Tracks resting heart rate dips and blood oxygen levels (useful for sleep apnea detection) |
| Accelerometer | Body movement | Measures actigraphy to distinguish restless periods from deep sleep |
| Microphone | Audio levels | Captures snoring, sleep talking, and environmental noise disturbances |
| Temperature & Humidity | Room climate | Correlates sleep quality with environmental conditions (too hot/cold, humidity levels) |

# DATA ANALYSIS

Step 1:

- Combining data from multiple sensors (e.g., merging movement with heart rate).

Step 2:

- Machine learning models analyze the data to identify specific sleep phases (Light, Deep, REM, Awake).
- Preparation of sleep score and other outputs for the report.

Step 3:

- The system learns your personal, "normal" sleep baseline over time.
- It uses this data for identify anomalies or issues.

# OUTPUTS

| Output Category | Actionable Value |
|---|---|
| Daily Sleep Score | Provides a quick, easy-to-understand snapshot of overall sleep efficiency and duration |
| Sleep Architecture | Visual representation of time spent in REM, Light, and Deep sleep stages |
| Environmental Feedback | Highlights correlations (e.g., heart rate spikes at higher room temperatures like 24°C) |
| Smart Actuation | Enables automatic adjustments (e.g., thermostat control, smart lights for natural wake-up) |

# THANK YOU